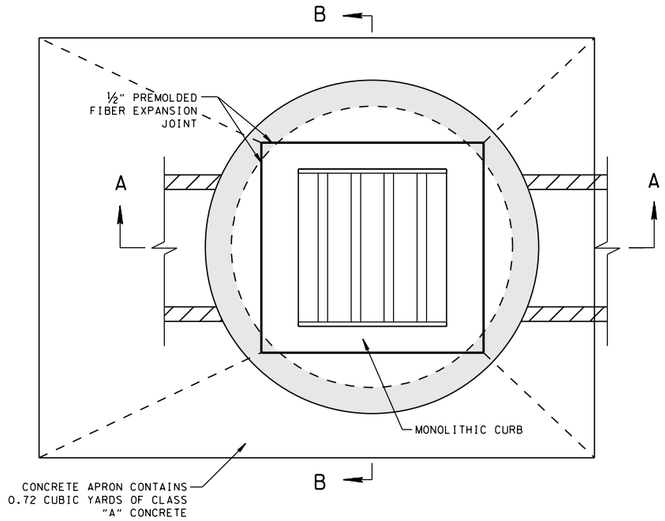

PLAN VIEW

OUT-TO-OUT DIAMETER FOR T501 REINFORCING BARS EQUALS OUTSIDE DIAMETER OF LID MINUS 6⅜ INCHES.

ADDITIONAL A-BARS ARE REQUIRED FOR THE LARGER STRUCTURE AS INDICATED BY "NO. OF EQ. SPACES 'J'"

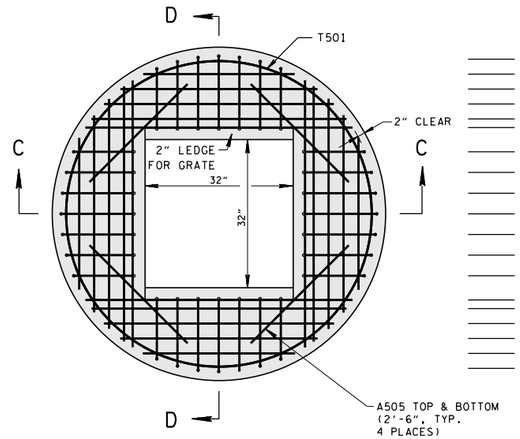

LID REINFORCING

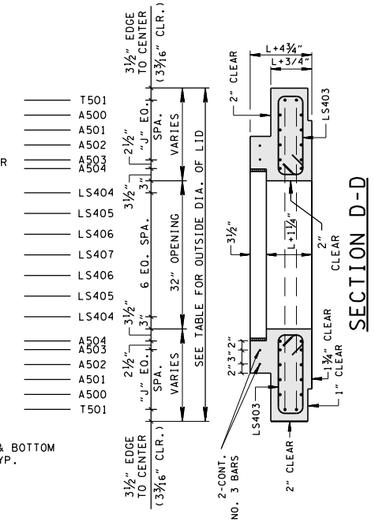

SECTION D-D

VARIABLE REINFORCING AND SPACING DIMENSIONS IN CONCRETE LID		
INSIDE DIA. OF CATCH BASIN (INCHES)	OUTSIDE DIA. OF LID (INCHES)	NO. OF EQUAL SPACES "J"
60	72	3
72	86	4
84	100	5
96	114	6

- REV. 1-19-99: ADDED CURB HEIGHT.
- REV. 5-27-01: CHANGED PAY ITEMS IN GENERAL NOTE (H) ADDED CATCH BASIN MAXIMUM DEPTH NOTE.
- REV. 9-5-04: CHANGED GROOVE DEPTH IN LID.

REV. 8-01-12: REVISED CATCH BASIN LID FOR COMPLIANCE WITH AASHTO LRFD BRIDGE DESIGN SPECIFICATIONS, 4TH EDITION WITH INTERIMS. REVISED REINFORCING, GENERAL NOTES AND ADDITIONAL MISC. DRAFTING EDITS.

CATCH BASIN DIMENSIONS							FOR DESIGN USE ONLY CATCH BASIN MINIMUM DESIGN DEPTH (FEET)			
INSIDE DIAMETER (D) OF PIPE (INCHES)	PIPE WALL THICKNESS (INCHES)	DIAMETER OF CUT-OUT HOLES (INCHES)	PRECAST SECTION MIN. HEIGHTS (INCHES)							
			60"	72"	84"	96"	60"	72"	84"	96"
18	2½	25	55½	58	61½	63	3.67	3.79	4.17	4.29
24	3	32	62½	65	68½	70	4.21	4.33	4.71	4.83
30	3½	39	69½	72	75½	77	4.75	4.88	5.25	5.38
36	4	46	76½	79	82½	84	5.29	5.42	5.79	5.92
42	4½	53	83½	86	89½	91	5.83	5.96	6.33	4.46
48	5	60	90½	93	96½	98	6.38	6.50	6.88	7.00
54	5½	67	97½	100	103½	105	6.92	7.04	7.42	7.54
60	6	74	104½	107	110½	112	7.46	7.58	7.96	8.08
66	6½	81	111½	114	117½	119	8.00	8.13	8.50	8.63

(1) CUT-OUT HOLES BASED ON REINFORCED CONCRETE PIPE WITH WALL TYPE "B".

(2) ALL FLEXIBLE PIPE MATERIALS REQUIRE GASKET. SEE STANDARD DRAWING D-PB-2.

(3) CUT-OUT HOLES FOR PRECAST STRUCTURES TO BE FORMED IN ORDER TO OBTAIN A SMOOTH EDGED HOLE. SCORED OR ETCHED HOLES WITH REINFORCING STEEL LEFT UNCUT WILL NOT BE PERMITTED.

CATCH BASIN MAXIMUM DEPTH NOTE
MAXIMUM DEPTH FOR THIS STRUCTURE IS 40.00'.

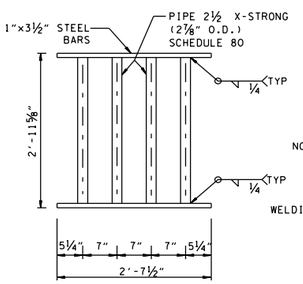

GRATE UNIT NO. 38

GRATE UNIT IS STRUCTURALLY DESIGNED TO CARRY LOW SPEED MAINTENANCE VEHICLES ONLY.

NOTE: MATERIAL FOR GRATE SPECIFICATIONS FOR STEEL BARS SHALL CONFORM TO ASTM A36. FOR THE PIPE CROSS MEMBERS, ASTM A53 TYPE E GRADE B. THE GRATE UNIT SHALL BE PAINTED BLACK, FEDERAL SPEC. TT-E-489G.

WELDING: AASHTO/AWS D1.5M/D1.5 BRIDGE WELDING CODE (LATEST EDITION)

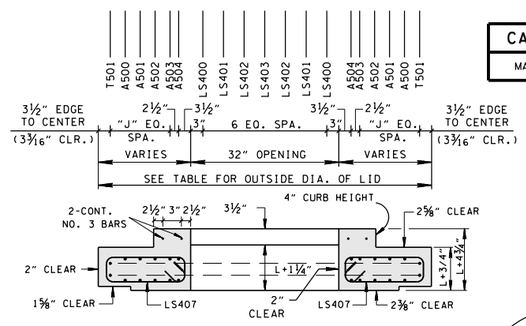

SECTION C-C

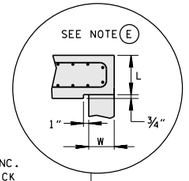

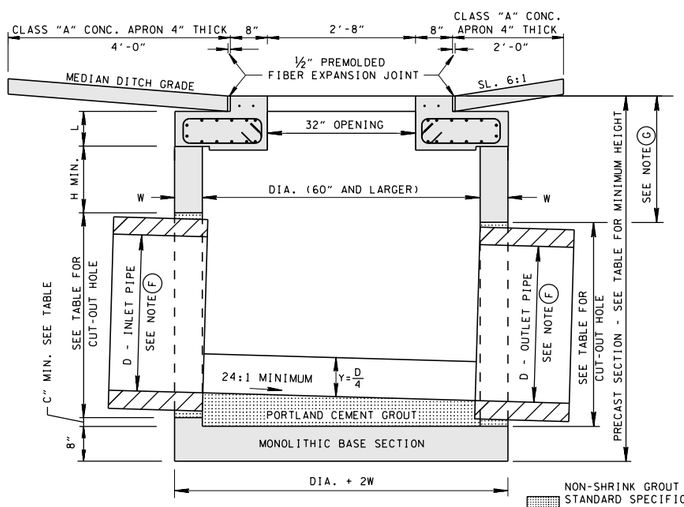

SECTION A-A

NON-SHRINK GROUT PER STANDARD SPECIFICATIONS SECTION 918 REQUIRED AROUND PIPE OPENINGS ONLY

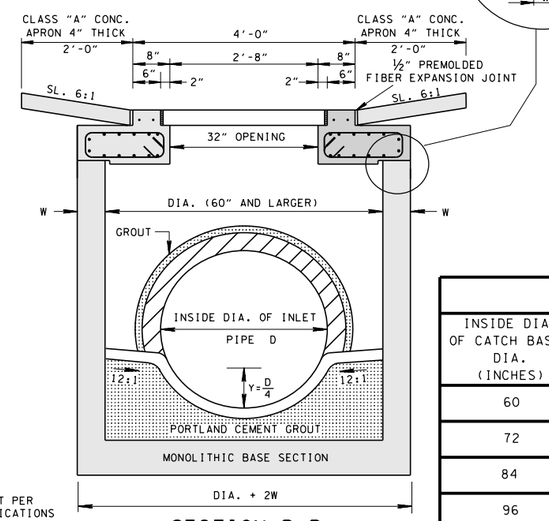

SECTION B-B

GENERAL NOTES

(A) ALL PRECAST ELEMENTS TO MEET ASTM C478 (CURRENT EDITION) AND AASHTO M199 (CURRENT EDITION) UNLESS SUPERSEDED BY THIS DRAWING.

CONCRETE: f'_c = 4,000 POUNDS PER SQUARE INCH AT 28 DAYS
REINFORCING STEEL: ASTM A615, F_y = 60,000 POUNDS PER SQUARE INCH
ALL REINFORCING IS TO BE INSTALLED AS DETAILED ON THIS DRAWING.

(B) PRECAST CATCH BASIN UNITS WHICH ARE DAMAGED DURING SHIPMENT OR INSTALLATION WILL BE REJECTED. IT SHALL BE THE RESPONSIBILITY OF THE CONTRACTOR TO REPLACE DAMAGED CATCH BASIN UNITS AT HIS OWN EXPENSE.

(C) APPROPRIATE SIZING AND LOCATION OF LIFTING DEVICES SHALL BE THE RESPONSIBILITY OF THE FABRICATOR.

(D) THE CONTRACTOR IS TO PATCH ALL LIFTING DEVICE HOLES WITH GROUT AND PLACE A MINIMUM OF ONE (1) INCH OF COVER OVER THE HARDWARE OF THESE DEVICES ON BOTH TOP AND BOTTOM SURFACES.

(E) ALTERNATIVE JOINT DETAILS MAY BE ACCEPTABLE. SEE STANDARD DRAWING D-CB-99R FOR ADDITIONAL DETAILS.

(F) SEE ROADWAY PLANS DRAINAGE TABULATION FOR PIPE INLET AND OUTLET ELEVATIONS. IF NEEDED, INVERT ELEVATIONS MAY BE ADJUSTED AS DIRECTED BY THE ENGINEER IN ORDER TO ACCOMMODATE INLET AND OUTLET PIPES.

(G) FOR CASES WHERE THE OUTLET PIPE DIAMETER IS LARGER THAN THE INLET PIPE DIAMETER, A MINIMUM 20 INCH DEPTH (FOR 60 INCH INSIDE DIAMETER CATCH BASIN), 21 INCH DEPTH (FOR 72 INCH INSIDE DIAMETER CATCH BASIN), 25 INCH DEPTH (FOR 84 INCH INSIDE DIAMETER CATCH BASIN) OR 26 INCH DEPTH (FOR 96 INCH INSIDE DIAMETER CATCH BASIN) SHALL BE MAINTAINED ABOVE THE OUTLET PIPE.

(H) CONCRETE JOINT MATERIAL TO BE ½" PREMOLDED FIBER IN ACCORDANCE WITH SECTION 905 OF STANDARD SPECIFICATIONS.

(I) PAY DEPTH MEASUREMENT MADE FROM TOP OF GRATE TO OUTLET FLOW ELEVATION. PAYMENT FOR CATCH BASIN WILL BE MADE UNDER ITEM NUMBERS 611-38.01 CATCH BASINS, TYPE 38, 0'-4' DEPTH THROUGH 611-38.07, CATCH BASINS, TYPE 38, > 24'-28' DEPTH PER EACH. PAYMENT FOR CATCH BASINS DEEPER THAN 28' WILL BE MADE UNDER ITEM NUMBER 611-38.08, CATCH BASINS, TYPE 38, ____ '- ____ ' DEPTH PER EACH. PAYMENT INCLUDES GRATE. WHEN CLASS "A" CONCRETE APRON IS USED, IT IS TO BE INCLUDED IN THE PRICE BID PER CATCH BASIN.

CATCH BASIN DIMENSIONS							
INSIDE DIA. OF CATCH BASIN DIA. (INCHES)	WALL THICKNESS W (INCHES)	LID THICKNESS L (INCHES)	OUTSIDE DIA. OF CATCH BASIN DIA. + 2W (INCHES)	MAX. INLET OR OUTLET CONC. PIPE SIZE - STR. (INCHES)	MAX. INLET OR OUTLET CONC. PIPE SIZE - 90° (INCHES)	DIMENSION	
						C (INCHES)	H (INCHES)
60	6	8	72	36	24	2.5	8
72	7	9	86	48	30	3.0	8
84	8	9	100	60	36	3.5	12
96	9	10	114	66	42	4.0	12

- MINOR REVISION -- FHWA APPROVAL NOT REQUIRED.

STATE OF TENNESSEE
DEPARTMENT OF TRANSPORTATION

STANDARD PRECAST CIRCULAR NO. 38 CATCH BASIN

NOT TO SCALE | 1-19-98 | D-CB-38RB